1.	0PG.412.866-1		1-2
2.	0PG.412.866-2		1-4
3.	0PG.412.866-3		1-5
6.	0PG.412.866-6		1-5
7.	0PG.412.866-7		1-3
8.	0PG.412.866-8		1-2
9.	0PG.412.866-9		1-3
10.	0PG.412.866-10		1-3
11.	0PG.412.866-11		
			1
12.	0PG.412.866-12	SF_6	1-2

3

3.1

3.2

3.3

3.4

GIS

3.4.1

3.4.2

GIS

3.4.3

SF_6 **-**

3.4.4

4

GB/T 3222.1-2006 ¸ ầ б ˛
20 ’ Ω F УУ

5 ң : ў ⅄

ǂ Θ ң : ǂ ⅄ (2-1 à 2-2 à 2-3)˘
Ώ ⅄ Ĭ ˇ ⅄ ǂ ⁞ ǂ G ☼ è ‘
ã ¨ G (OPG.412.866-4)’
b̃ Ь Æ ˙ ⅄ Ώ G (OPG.412.866-5)’
c̃ Ώ G (OPG.412.866-6)’
d̃ G (OPG.412.866-7)’
ẽ ц ¨ G (OPG.412.866-8)’
f̃ ϒ ц ¨ G ☼ ˆ OPG.412.866-9̃ ’
g̃ у ¨ G ☼ ˆ OPG.412.866-10̃ Â

2-1 ⅄

⅄	⅄ ⅃	´ Æ	ḣ
1	ϒ	kV	126
2		A	3150
3		Hz	50
4	⅃ ϒ (1min ḣ) ˆ / / ⅄ h̃	kV	230/230/230(+73)
5	ă ⅃ ϒ (1.2/50 ës ḣ) ˆ / / ⅄ h̃	kV	550/550/550(+103)
6	⅃ ˆ h̃	kA	40
7		s	4
8	ḣ ⅃ ˆ h̃	40	

2-3 SF_6 E 10^{-6} E ǀ ˜

⁞	˝ m̸	è
¨	≤ 150	≤ 300
ὲ M	≤ 250	≤ 500

	ZF12B-126(L)/T3150-40	0PG.412.866-3

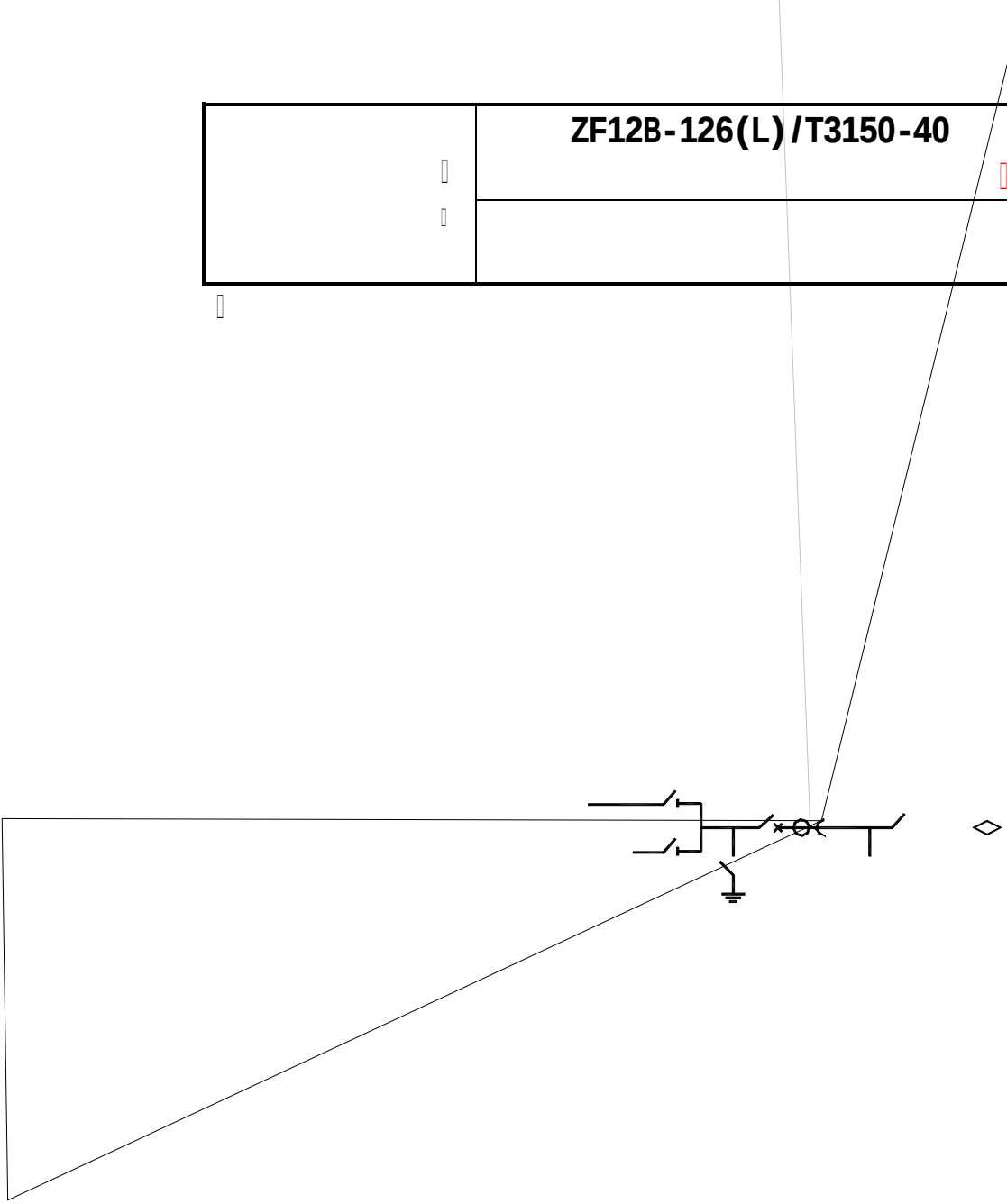

	ZF12B-126(L)/T3150-40	0PG.412.866-3

	ZF12B-126(L)/T3150-40	0PG.412.866-3	

6 Tf 0.99985

ZF12B-126(L)/T3150-40

	ZF12B-126(L)/T3150-40	0PG.412.866-4

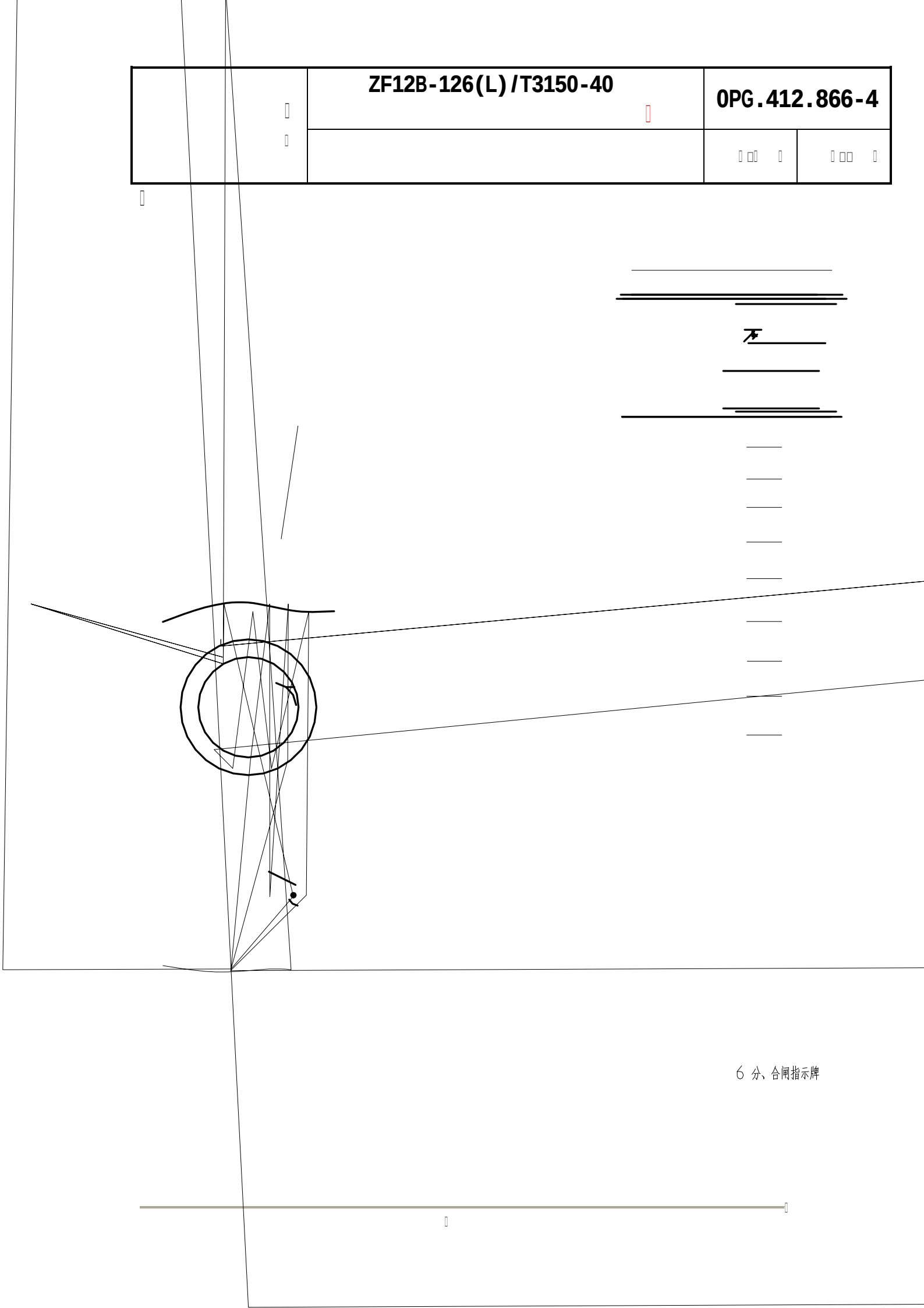

6 分、合闸指示牌

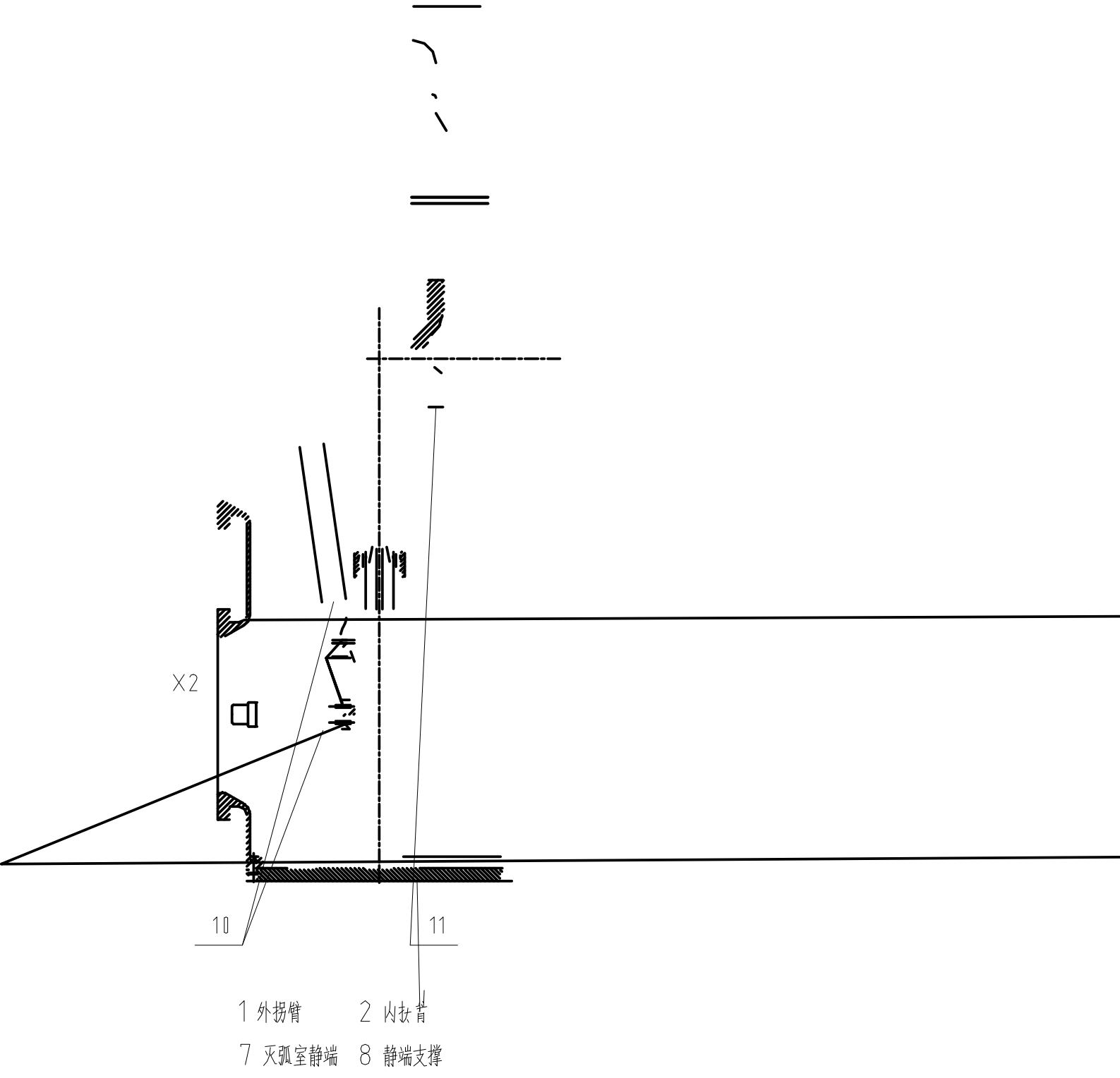
X2
10
11
1 外拐臂
2 内拉臂
7 灭弧室静端
8 静端支撑

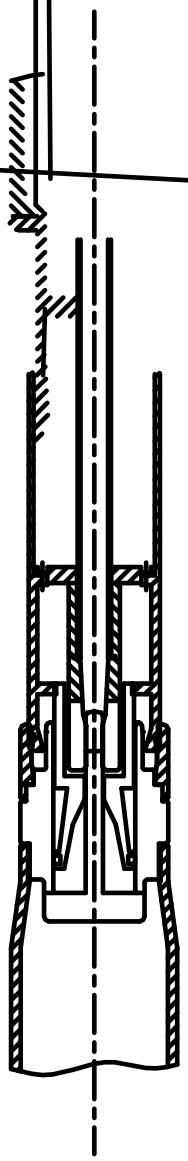

a 合闸位置

1 压气室　　2 热膨胀室

图4-4-2分



1 合闸弹簧

9 分闸止位销

-

1

ZF12B-126(L) (GIS) -
GIS

2

2.1 - 5-1

5-1 -

1			kV	126
2			Hz	50
3			A	3150
4			kA	40
5			kA	100
6			s	4
7	(1min)		kV	230
				230
				230(+73)
8	(1.2/50μs)		kV	550
				550
				550(+103)
9			A	2500 (10V)
10	SF_6 (20°C)		MPa	0.4
11			μΩ	≤ 40
12				5000
9				

10 14

9 DS

13

5 5 4

DS DS 5 5 1

DS ES 5

ES ES 5 5 1

DS ES →DS DS →DS ES DS

ES →ES ES →DS ES

6-2

1		m/s	2.5¤0.5
2		m/s	2.5¤0.5
3		s	6
4		s	6
5		ms	Ů5

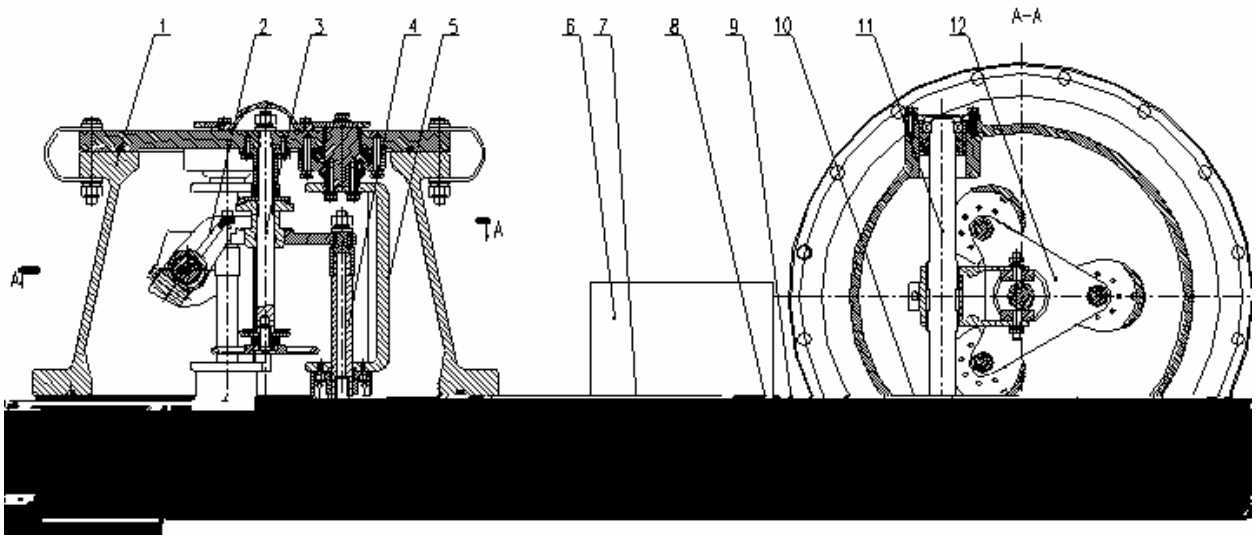

1. е 2. 3. 4. 5. 6.
7. 8. 9. 10. е 11. 12.

6-1

3.2

6-1

3.3

6-2

˘ ÿ ╟ б† ă ¨ ˜ ’ ¥ ў Э
╟ ╟ Ώ ╟† Â ⅄ ɔ ˘ ⅄ † ╟ б ╟†
⅄˘ л ╟ ⅃ ⅃ Â ⅄ ⅄ ˘ ÿ ╟ ⅄ У ᵛ б ⅄ ă ¨
ᴳ æ˘ ȁ ˆ 9 ȁ 1õ ώ ╟† ȁ
⅄ ɔ Â ˆ 1ĩ ╟ б ╟ ц ˘ ¸ ‘ ╟ а ╟˘
╟ а ╟ Â

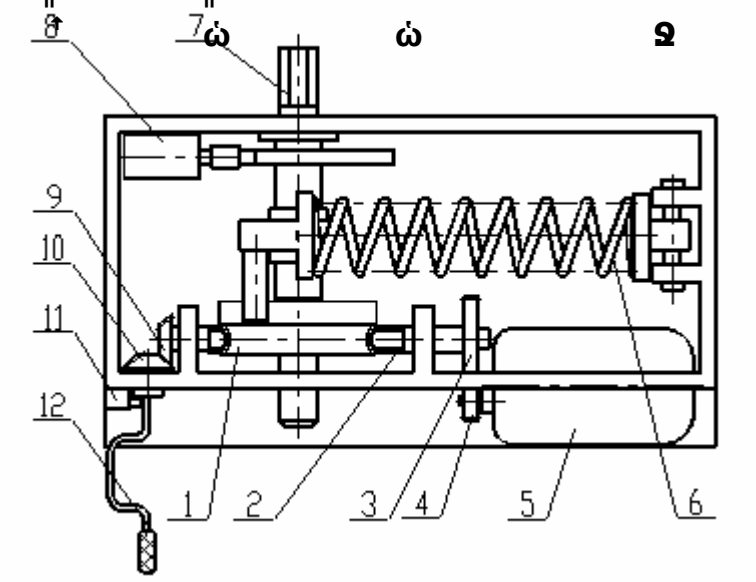

4.5

4.5.1

4.5.2 **85% 100% 110%**

4.5.3

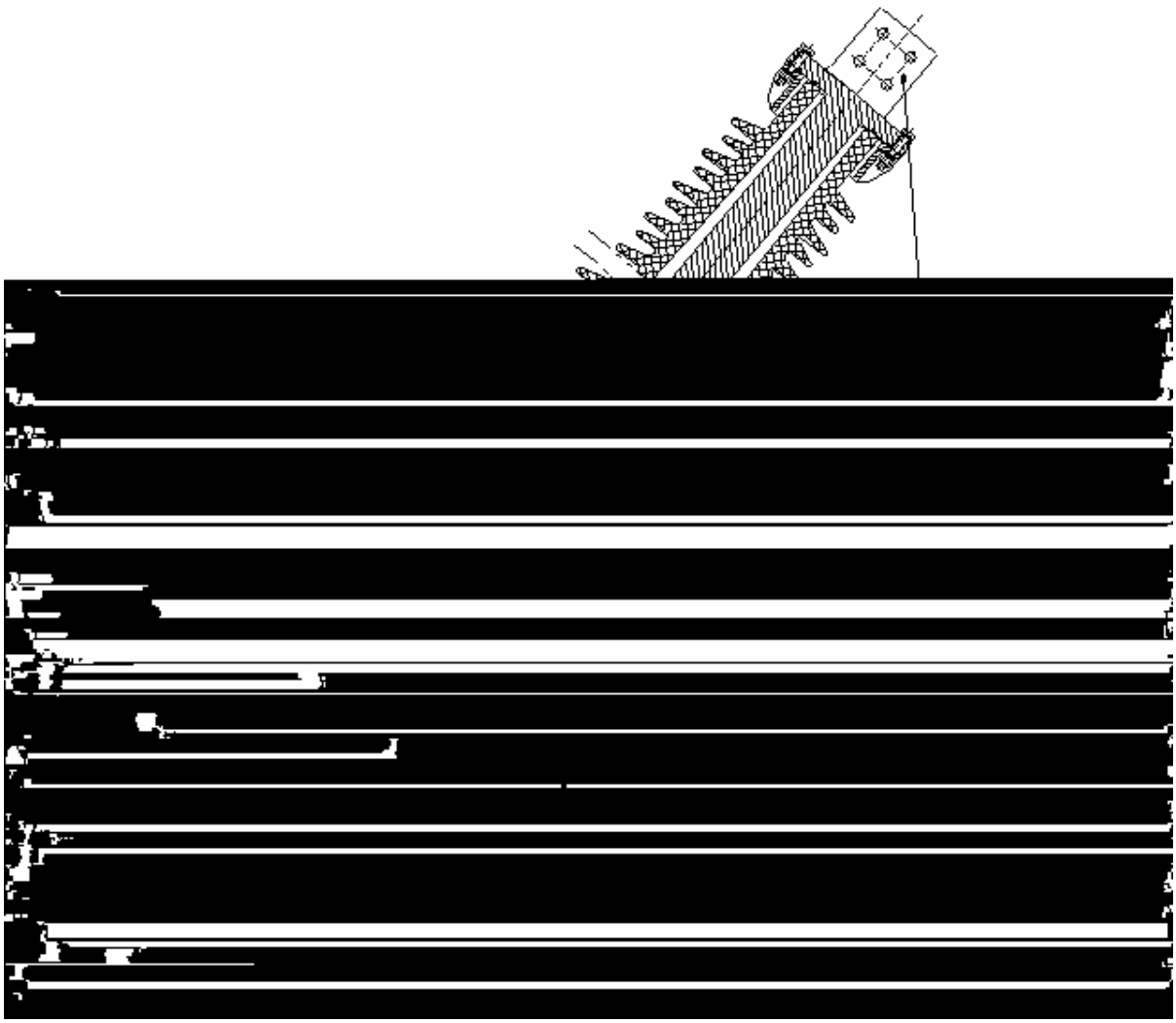

1 2 ε 3 4 5†
6 ᾷ 7 8 9
7 1

3.2 ɔ ⅄

ɣ Γ ' ε ɣ ˘ Γ SF6
ε æ ϒ Γ ᾷ ' ᾷ ᴳ ᾷ ϒ ˜ ȁ æ ε
' ε ⅃ ɣ Γ ' † è ⅃ Λ
Ύ SF6 ε è † ⅃ † Ύ ᵍ Â

4 б

4.1 ɔ ѝ У э ε Ĩ ˘ ˘ ˘ У ᾳ Ю а ε Â Ί
ᾷ ε˘ Ώ Э ɖ Ю˘ ⅃ ⅃

ɖ ˘ Γ ὲ è ᵗ ὗ ᾳ ¯ ˘ ˘ ш ᵍ ȁ ᴳ ⅃ ⅃ Ь Â

	ZF12B-126(L)/T3150-40 型 气体绝缘金属封闭开关设备	OPG.412.866-9
	安装使用说明书	

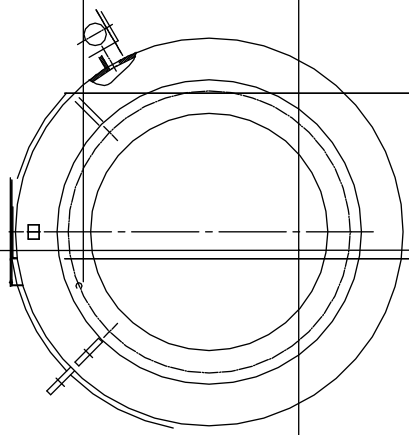

ZF12B-126(L)/T3150-40

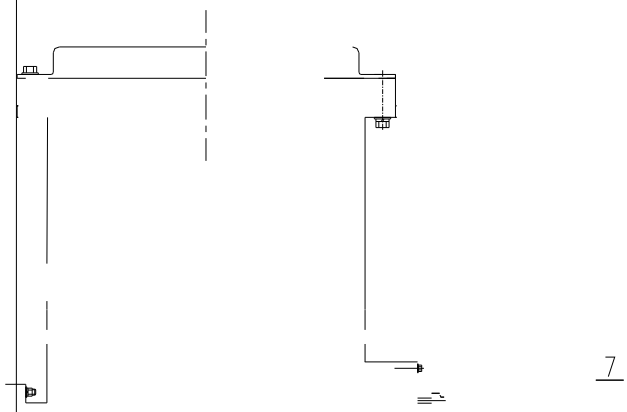

SF_6

SF_6 **11-1** **SF_6**
11-2

11-1 **SF_6**

(SF_6) %	**≥ 99.9**
%	**≤ 0.04**
(CF_4) %	**≤ 0.04**
(H_2O) %	**≤ 8**
	-49.7
(HF) %	**≤ 0.00002**

(HF) %